Using Smart Thermostats to Track Power Outages from Hurricane Irma

Alan Meier akmeier@ucdavis.edu

1

1000 ecobee thermostats in Florida acted as outage sensors during Irma's passage. They stopped transmitting when the power failed and began transmitting when power was restored.

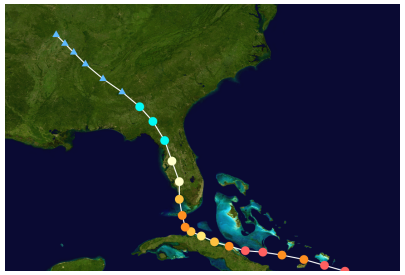

This data provides a consistent, regional assessment of grid conditions across 50+ utilities and two states.

2

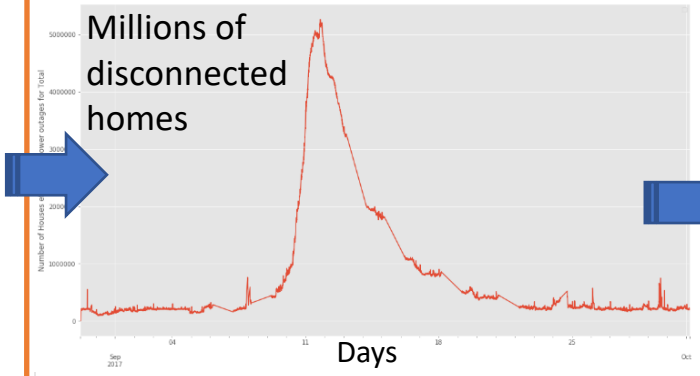

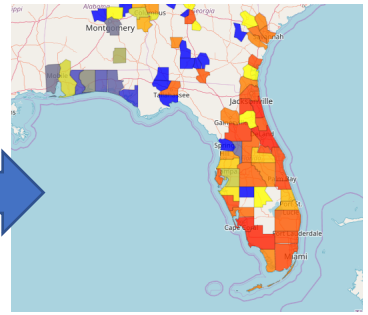

Ecobee and nest thermostats provide faster and more granular information about power outages than emergency authorities

3

The Grid and the Cable TV Network are Connected at the Node's Power Supply

Node

Power supply (cover removed)

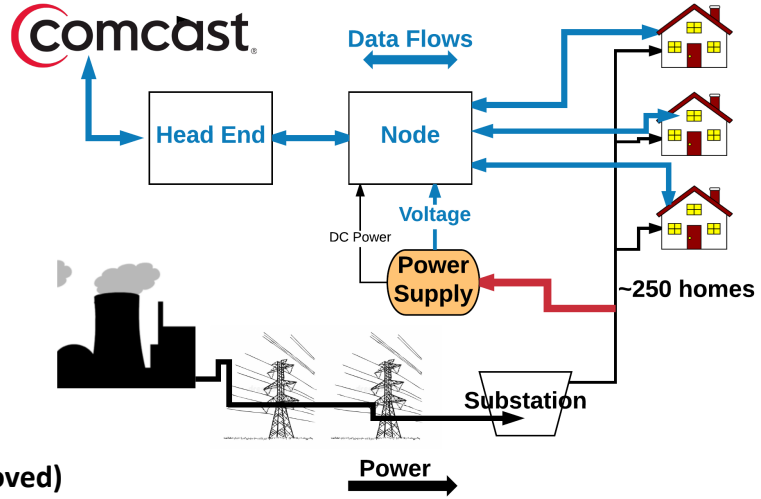

4

Findings

Internet-connected thermostats can provide valuable information for electric power companies:

- Outages
- AC load shapes

The cable TV network can provide even more granular, real-time information for the electric power company:

- Outages
- Voltages
- Potential infrastructure problems
- Cyber-secure, parallel visibility into grid status

These networks already exist and have low operating costs

October 2019