Energypolis

A platform for urban energy system research

Swiss - U.S. Energy Innovation Days (5th edition)
August 22nd 2018, Sion

Jessen Page jessen.page@hes-so.ch

Surplus PV production

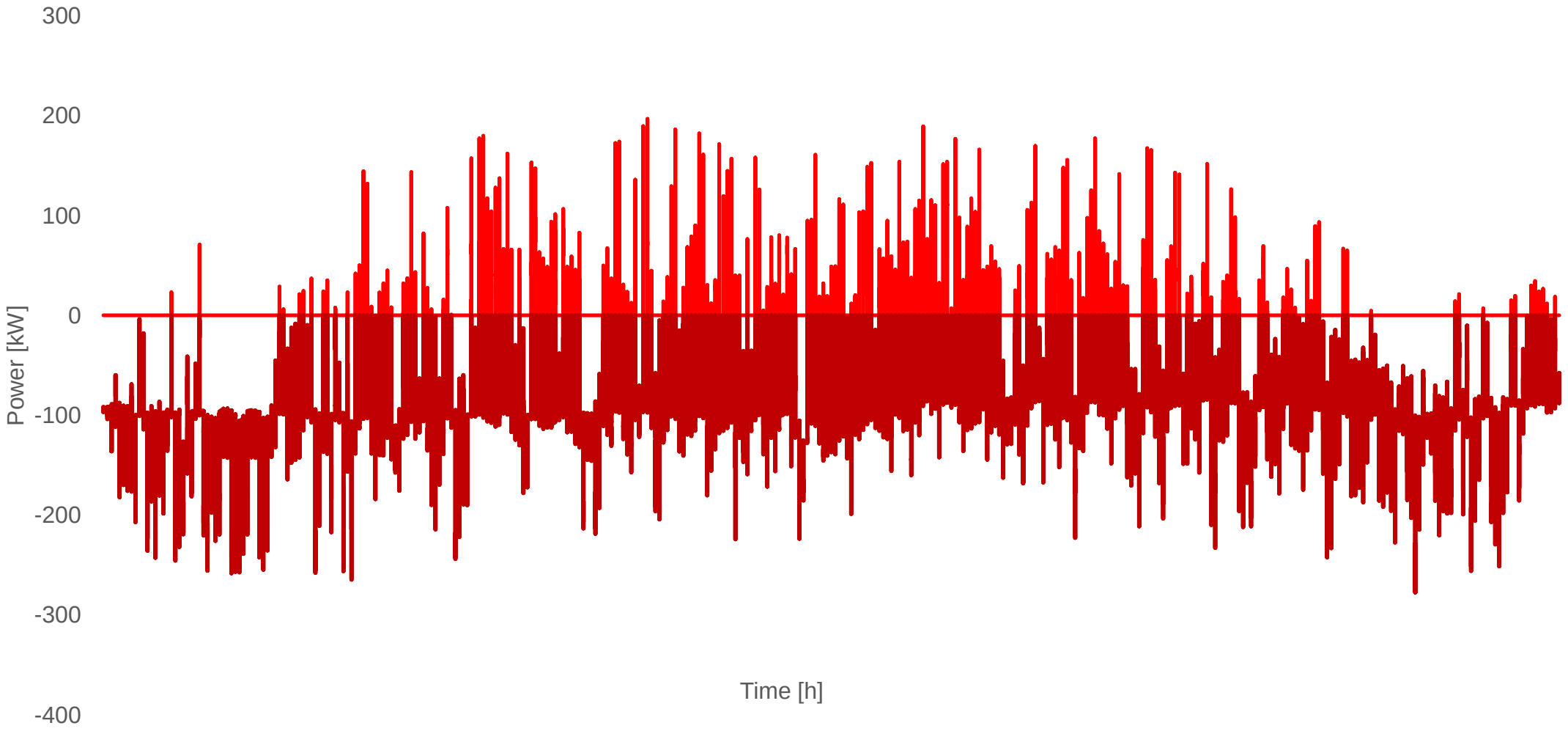

Objectives

Demonstrate **sustainable alternatives to fossil and fissil energy** sources within a dense **urban environment.**

Demonstrate the **capacity of a neighbourhood** to act as an **autonomous multi-energy system** and offer **flexibility** and **balancing capacity** to local network operators.

Offer a platform of **research**, **experimentation** and **demonstration** to

Industries producing innovative (technological, integrated) solutions

Energy utilities willing to test integrated (design and control) solutions before rolling them out at city level.

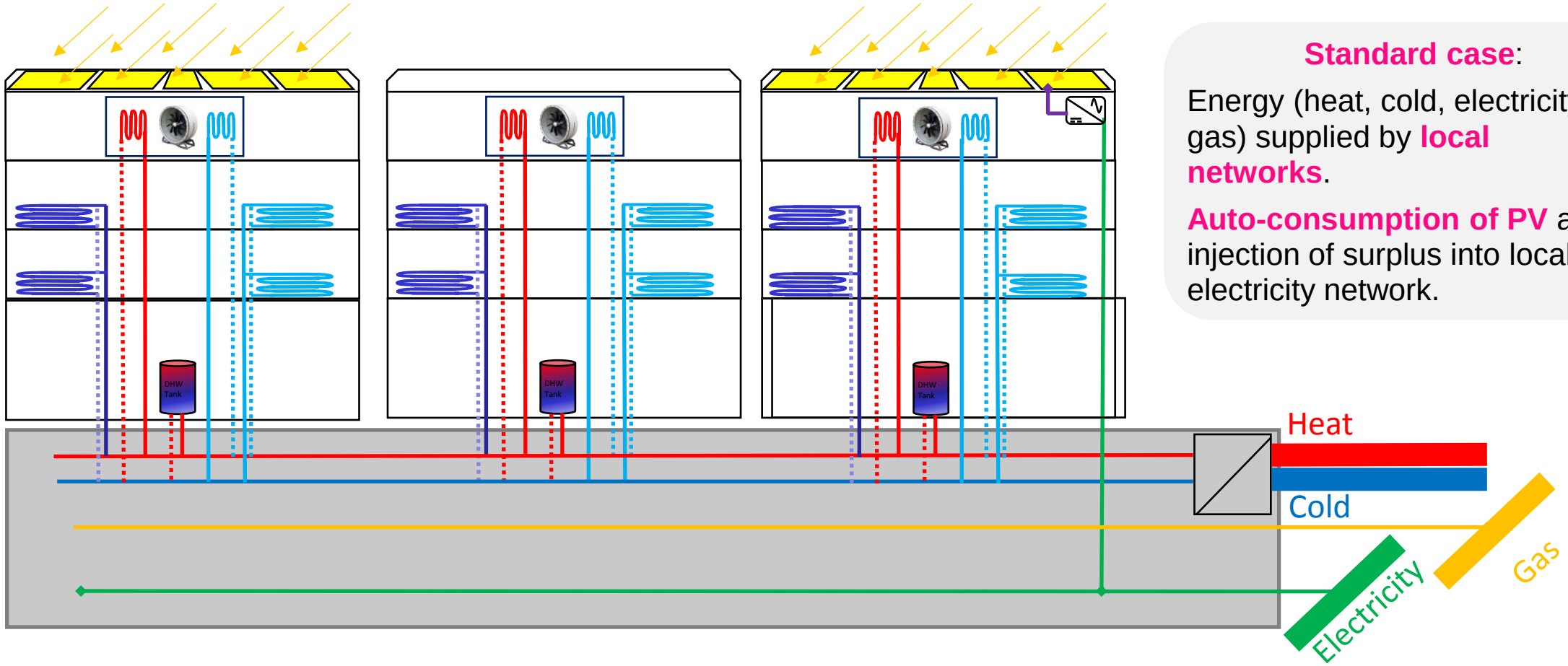

Standard case:

Energy (heat, cold, electricity, gas) supplied by **local networks**.

Auto-consumption of PV and injection of surplus into local electricity network.

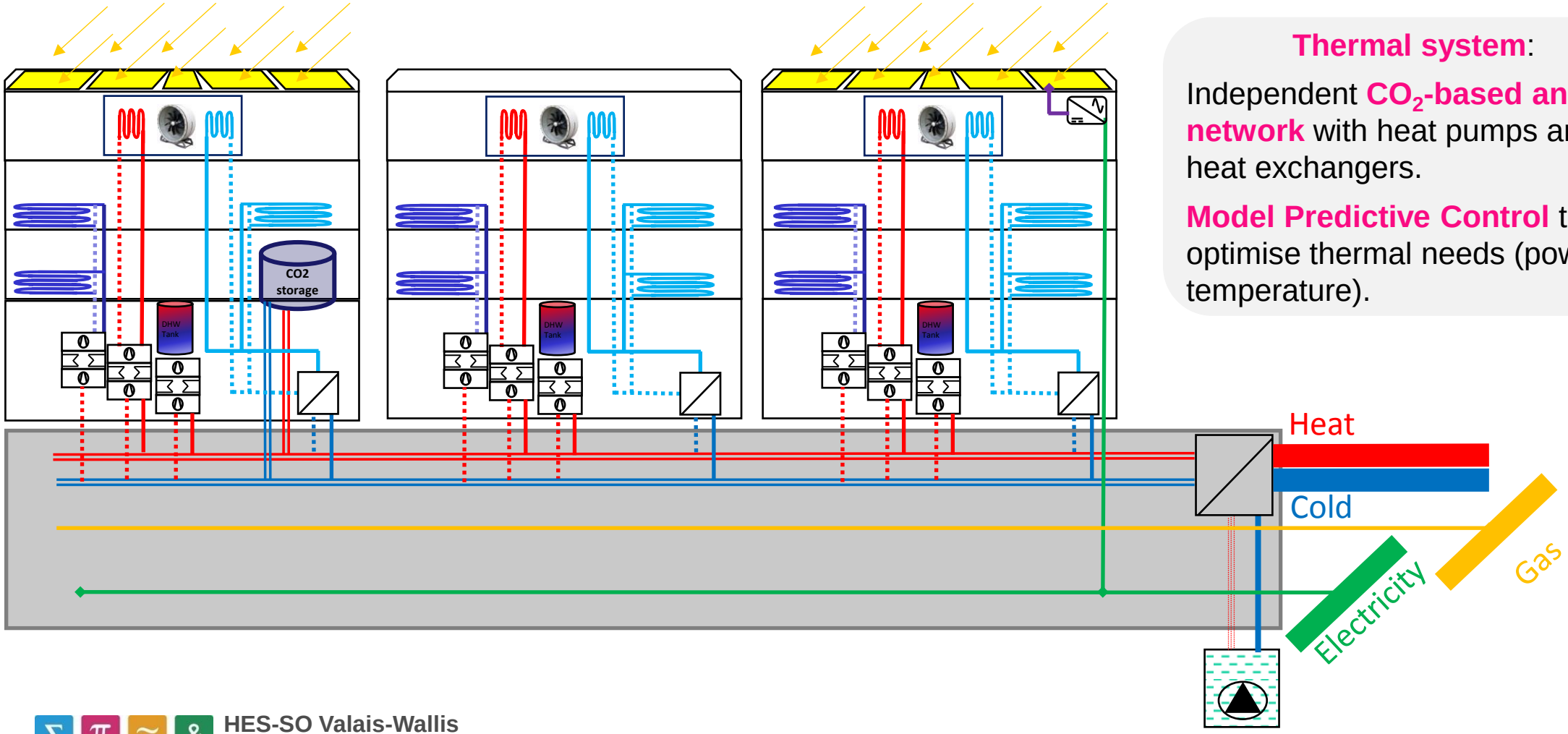

Thermal system:

Independent **CO_2-based anergy network** with heat pumps and heat exchangers.

Model Predictive Control to optimise thermal needs (power, temperature).

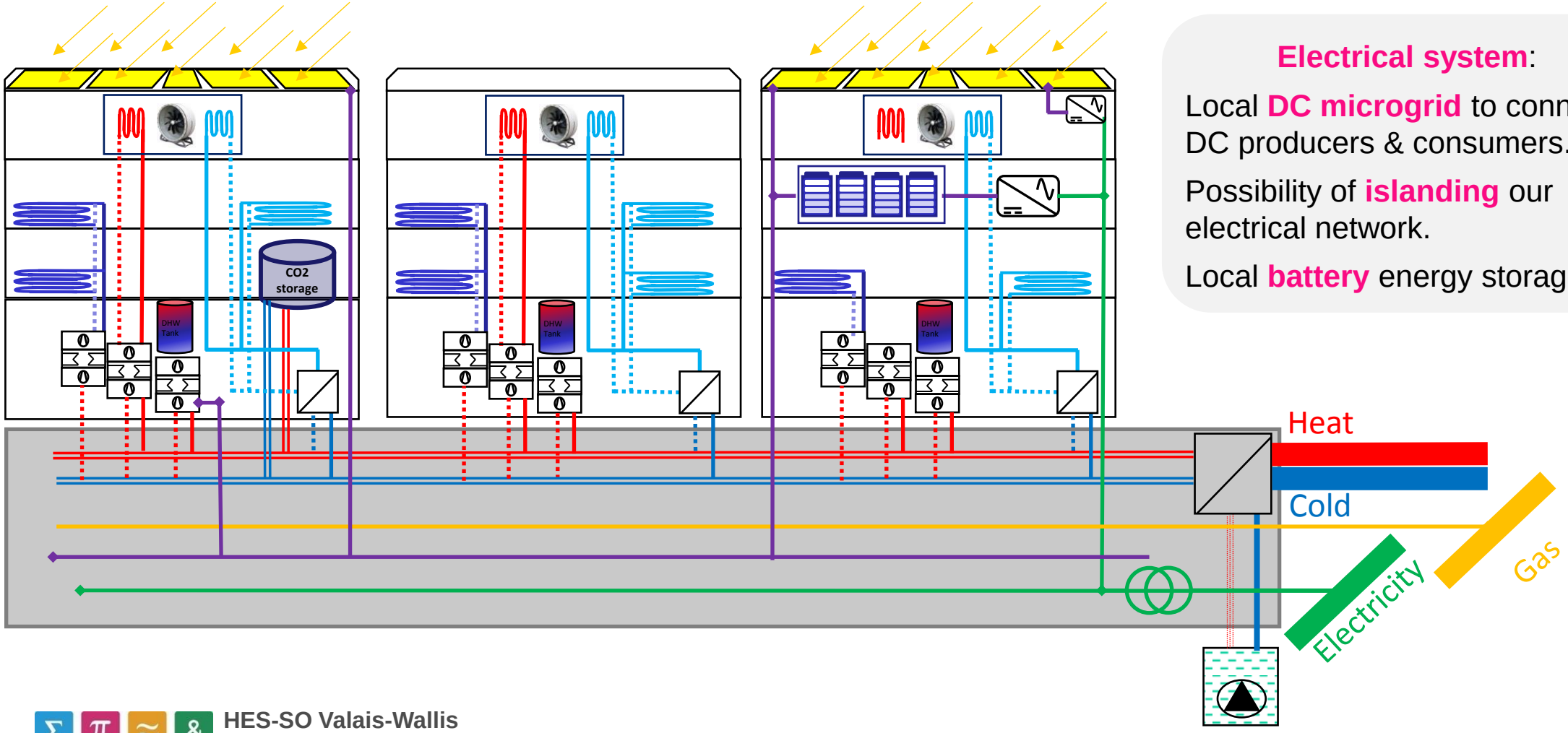

Electrical system:

Local **DC microgrid** to connect DC producers & consumers.

Possibility of **islanding** our electrical network.

Local **battery** energy storage.

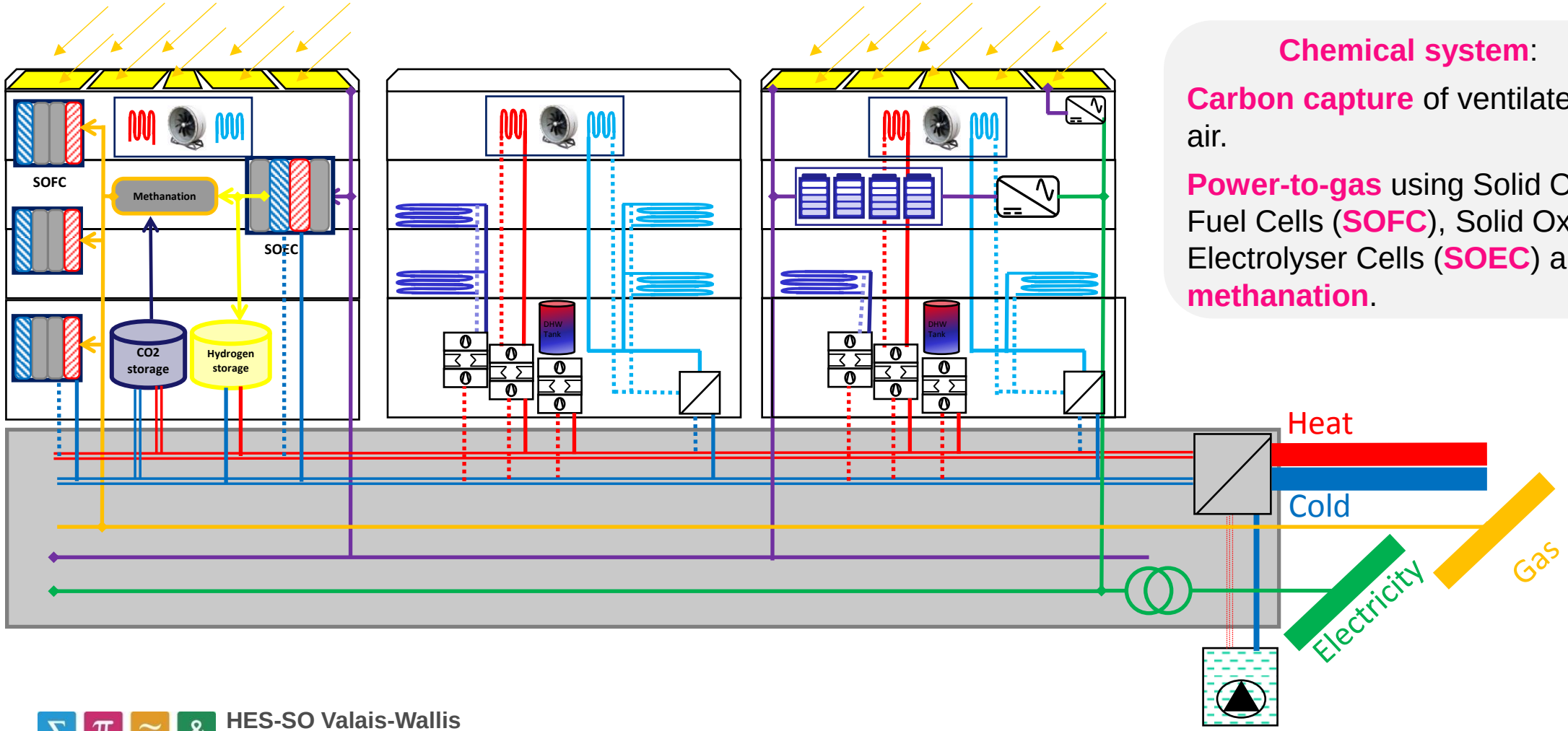

Chemical system:

Carbon capture of ventilated air.

Power-to-gas using Solid Oxide Fuel Cells (**SOFC**), Solid Oxide Electrolyser Cells (**SOEC**) and **methanation**.

Hes·so
VALAIS
WALLIS
School of
Engineering